EROSION AND SEDIMENT CONTROL PLAN

ARTISTS PARCELS

SAN FRANCISCO, CALIFORNIA

BEST MANAGEMENT PRACTICES NOTES
RISK LEVEL 1 REQUIREMENTS

THE FOLLOWING NOTES INCLUDE MINIMUM REQUIREMENTS EXCERPTED FROM ATTACHMENT C OF CA STATE WATER RESOURCES CONTROL BOARD (SWRCB) ORDER NO. 2009-0009 DWQ, NPDES NO. CAS000002 FOR A RISK LEVEL 1 SITE.

A. EFFLUENT STANDARDS

1. STORMWATER DISCHARGES AND AUTHORIZED NON-STORMWATER DISCHARGES REGULATED BY SWRCB ORDER NO. 2009-0009 DWQ SHALL NOT CONTAIN A HAZARDOUS SUBSTANCE EQUAL TO OR IN EXCESS OF REPORTABLE QUANTITIES ESTABLISHED IN 40 C.F.R. §§117.3 AND 302.4, UNLESS A SEPARATE NPDES PERMIT HAS BEEN ISSUED TO REGULATE THOSE DISCHARGES.
2. DISCHARGERS SHALL MINIMIZE OR PREVENT POLLUTANTS IN STORM WATER DISCHARGES AND AUTHORIZED NON-STORMWATER DISCHARGES THROUGH THE USE OF CONTROLS, STRUCTURES, AND MANAGEMENT PRACTICES THAT ACHIEVE BAT FOR TOXIC AND NON-CONVENTIONAL POLLUTANTS AND BCT FOR CONVENTIONAL POLLUTANTS.
3. NUMERIC – RISK LEVEL 1 SITES ARE NOT SUBJECT TO A NUMERIC EFFLUENT STANDARD.

B. GOOD SITE MANAGEMENT "HOUSEKEEPING"

CONSTRUCTION MATERIALS
1. MAINTAIN AN INVENTORY OF THE PRODUCTS USED AND/OR EXPECTED TO BE USED AND THE END PRODUCTS THAT ARE PRODUCED AND/OR EXPECTED TO BE PRODUCED. THIS DOES NOT INCLUDE MATERIALS AND EQUIPMENT THAT ARE DESIGNED TO BE OUTDOORS AND EXPOSED TO ENVIRONMENTAL CONDITIONS (I.E., POLES, EQUIPMENT PADS, CABINETS, CONDUCTORS, INSULATORS, BRICKS, ETC.).
2. COVER AND BERM LOOSE STOCKPILED CONSTRUCTION MATERIALS THAT ARE NOT ACTIVELY BEING USED (I.E., SOIL, SPOILS, AGGREGATE, FLY-ASH, STUCCO, HYDRATED LIME, ETC.).
3. STORE CHEMICALS IN WATERTIGHT CONTAINERS (WITH APPROPRIATE SECONDARY CONTAINMENT TO PREVENT ANY SPILLAGE OR LEAKAGE) OR IN A STORAGE SHED (COMPLETELY ENCLOSED).
4. MINIMIZE EXPOSURE OF CONSTRUCTION MATERIALS TO PRECIPITATION. THIS DOES NOT INCLUDE MATERIALS AND EQUIPMENT THAT ARE DESIGNED TO BE OUTDOORS AND EXPOSED TO ENVIRONMENTAL CONDITIONS (I.E., POLES, EQUIPMENT PADS, CABINETS, CONDUCTORS, INSULATORS, BRICKS, ETC.).
5. IMPLEMENT BMPS TO PREVENT THE OFF-SITE TRACKING OF LOOSE CONSTRUCTION AND LANDSCAPE MATERIALS.
6. APPLY GRAVEL CONSTRUCTION ENTRANCE MATERIAL WITHIN MATERIAL STORAGE AREA.

WASTE MANAGEMENT
1. PREVENT DISPOSAL OF ANY RINSE OR WASH WATERS OR MATERIALS ON IMPERVIOUS OR PERVIOUS SITE SURFACES OR INTO THE STORM DRAIN SYSTEM.
2. ENSURE THE CONTAINMENT OF SANITATION FACILITIES (E.G., PORTABLE TOILETS) TO PREVENT DISCHARGES OF POLLUTANTS TO THE STORM WATER DRAINAGE SYSTEM OR RECEIVING WATER.
3. CLEAN OR REPLACE SANITATION FACILITIES AND INSPECTING THEM REGULARLY FOR LEAKS AND SPILLS.
4. COVER WASTE DISPOSAL CONTAINERS AT THE END OF EVERY BUSINESS DAY AND DURING A RAIN EVENT.
5. PREVENT DISCHARGES FROM WASTE DISPOSAL CONTAINERS TO THE STORM WATER DRAINAGE SYSTEM OR RECEIVING WATER.
6. TRASH RECEPTACLES WILL BE PROVIDED THROUGHOUT THE SITE AND UTILIZED BY ALL WORKERS FOR MISCELLANEOUS TRASH. SITE REFUSE WILL BE PICKED UP ON A WEEKLY BASIS OR AS OFTEN AS NECESSARY IN ORDER TO KEEP THE SITE CLEAN. FAILURE TO COMPLY WITH SITE CLEANUP AND/OR BMPS MAY RESULT IN THE ISSUANCE OF A CORRECTIVE NOTICE, CITATION, OR PROJECT STOP WORK ORDER.
7. CONTAIN AND SECURELY PROTECT STOCKPILED WASTE MATERIAL FROM WIND AND RAIN AT ALL TIMES UNLESS ACTIVELY BEING USED.
8. IMPLEMENT PROCEDURES THAT EFFECTIVELY ADDRESS HAZARDOUS AND NON-HAZARDOUS SPILLS.
9. DEVELOP A SPILL RESPONSE AND IMPLEMENTATION ELEMENT OF THE SWPPP PRIOR TO COMMENCEMENT OF CONSTRUCTION ACTIVITIES. THE SWPPP SHALL REQUIRE THAT:
   i. EQUIPMENT AND MATERIALS FOR CLEANUP OF SPILLS SHALL BE AVAILABLE ON SITE AND THAT SPILLS AND LEAKS SHALL BE CLEANED UP IMMEDIATELY AND DISPOSED OF PROPERLY; AND
   ii. APPROPRIATE SPILL RESPONSE PERSONNEL ARE ASSIGNED AND TRAINED.
10. ENSURE THE CONTAINMENT OF CONCRETE WASHOUT AREAS AND OTHER WASHOUT AREAS THAT MAY CONTAIN ADDITIONAL POLLUTANTS SO THERE IS NO DISCHARGE INTO THE UNDERLYING SOIL AND ONTO THE SURROUNDING AREAS.

VEHICLE STORAGE AND MAINTENANCE
1. PREVENT OIL, GREASE, OR FUEL TO LEAK IN TO THE GROUND, STORM DRAINS OR SURFACE WATERS.
2. PLACE ALL EQUIPMENT OR VEHICLES, WHICH ARE TO BE FUELED, MAINTAINED AND STORED IN A DESIGNATED AREA FITTED WITH APPROPRIATE BMPS.
3. APPLY GRAVEL CONSTRUCTION ENTRANCE MATERIAL WITHIN THE VEHICLE STORAGE AREA.
4. CLEAN LEAKS IMMEDIATELY AND DISPOSING OF LEAKED MATERIALS PROPERLY.
5. SUBCONTRACTORS SHOULD BE NOTIFIED THAT THEY ARE TO PARK ON PAVED OR DESIGNATED GRAVEL AREAS AND NOT DRIVE INTO UN-PAVED AREAS IN ORDER TO AVOID TRACKING DIRT ONTO PAVEMENT.

LANDSCAPE MATERIALS
1. CONTAIN STOCKPILED MATERIALS SUCH AS MULCHES AND TOPSOIL WHEN THEY ARE NOT ACTIVELY BEING USED.
2. CONTAIN FERTILIZERS AND OTHER LANDSCAPE MATERIALS WHEN THEY ARE NOT ACTIVELY BEING USED.
3. DISCONTINUE THE APPLICATION OF ANY ERODIBLE LANDSCAPE MATERIAL WITHIN 2 DAYS BEFORE A FORECASTED RAIN EVENT OR DURING PERIODS OF PRECIPITATION.
4. APPLY ERODIBLE LANDSCAPE MATERIAL AT QUANTITIES AND APPLICATION RATES ACCORDING TO MANUFACTURE RECOMMENDATIONS OR BASED ON WRITTEN SPECIFICATIONS BY KNOWLEDGEABLE AND EXPERIENCED FIELD PERSONNEL.
5. STACK ERODIBLE LANDSCAPE MATERIAL ON PALLETS AND COVERING OR STORING SUCH MATERIALS WHEN NOT BEING USED OR APPLIED.

POTENTIAL POLLUTANTS
1. DISCHARGERS SHALL MAINTAIN A LIST OF POTENTIAL POLLUTANT SOURCES AND IDENTIFY ANY AREAS OF THE SITE WHERE ADDITIONAL BMPS ARE NECESSARY TO REDUCE OR PREVENT POLLUTANTS IN STORMWATER DISCHARGES AND AUTHORIZED NON-STORMWATER DISCHARGES. THIS POTENTIAL POLLUTANT LIST SHALL BE KEPT WITH THE SWPPP AND SHALL IDENTIFY ALL NON-VISIBLE POLLUTANTS WHICH ARE KNOWN, OR SHOULD BE KNOWN, TO OCCUR ON THE CONSTRUCTION SITE.

DUST CONTROL
1. DISCHARGERS SHALL IMPLEMENT GOOD HOUSEKEEPING MEASURES ON THE CONSTRUCTION SITE TO CONTROL THE AIR DEPOSITION OF SITE MATERIALS AND FROM SITE OPERATIONS. SUCH PARTICULATES CAN INCLUDE, BUT ARE NOT LIMITED TO, SEDIMENT, NUTRIENTS, TRASH, METALS, BACTERIA, OIL AND GREASE AND ORGANICS.
2. CONSTRUCTION TRAFFIC SPEEDS WILL BE LIMITED TO 15 MPH, OR LESS, AS REQUIRED BY THE CONTRACTOR.

C. NON-STORM WATER MANAGEMENT

1. DISCHARGERS SHALL IMPLEMENT MEASURES TO CONTROL ALL NON-STORMWATER DISCHARGES DURING CONSTRUCTION.
2. DISCHARGERS SHALL WASH VEHICLES IN SUCH A MANNER AS TO PREVENT NON_STORMWATER DISCHARGES TO SURFACE WATERS OR MS4 DRAINAGE SYSTEMS.
3. DISCHARGERS SHALL CLEAN STREETS IN SUCH A MANNER AS TO PREVENT UNAUTHORIZED NON-STORMWATER DISCHARGES FROM REACHING SURFACE WATER OR MS4 DRAINAGE SYSTEMS.

D. EROSION CONTROL

1. THE CONTRACTOR IS RESPONSIBLE FOR ALL ASPECTS OF EROSION CONTROL FOR THE PROJECT AND SHALL INSTALL AND MAINTAIN ANY DEVICES AND MEASURES NECESSARY TO THE SATISFACTION OF THE CITY OR COUNTY ENGINEER AND THE RWQCB.
2. EROSION CONTROL MEASURES WILL BE PROPERLY IN PLACE YEAR-ROUND. ALL REMOVABLE PROTECTIVE DEVICES SHOWN SHALL BE IN PLACE AT THE END OF EACH WORKING DAY WHEN THE FIVE DAY RAIN PROBABILITY EXCEEDS 50 PERCENT.
3. EXCAVATING, FILLING, BACKFILLING AND GRADING WORK SHALL NOT BE PERFORMED DURING UNFAVORABLE WEATHER CONDITIONS. WHEN WORK IS INTERRUPTED BY RAIN, EXCAVATING, FILLING, BACKFILLING, AND GRADING WORK SHALL NOT BE RESUMED UNTIL THE SITE AND SOIL CONDITIONS ARE SUITABLE.
4. ALL WORK SHOULD BE SCHEDULED TO PRESERVE EXISTING VEGETATION (PEV) AND DISTURB THE SMALLEST PORTIONS POSSIBLE AT ANY ONE TIME. DISTURBED PORTIONS SHOULD BE STABILIZED AS SOON AS GRADING WORK IS COMPLETE.
5. DISCHARGERS SHALL IMPLEMENT EFFECTIVE WIND EROSION CONTROL.
6. DISCHARGERS SHALL PROVIDE EFFECTIVE SOIL COVER FOR INACTIVE AREAS AND ALL FINISHED SLOPES, OPEN SPACE, UTILITY BACKFILL, AND COMPLETED LOTS. INACTIVE AREAS OF CONSTRUCTION ARE AREAS OF CONSTRUCTION ACTIVITY THAT HAVE BEEN DISTURBED AND ARE NOT SCHEDULED TO BE RE-DISTURBED FOR AT LEAST 14 DAYS. APPLICABLE SOIL COVER INCLUDES GRAVEL, CONCRETE AND SOD, AS WELL AS POLYACRYLAMIDE, EROSION CONTROL MATTING, MULCH WITH TACKIFIER, BONDED FIBER MATRIX, OR HYDROSEEDING. REFER TO THE TABLES ON THIS NOTES SHEET FOR APPLICATION RATES DEPENDING UPON PRODUCT UTILIZED.
7. SLOPES WILL BE GRADED SO THAT WATER IS DIRECTED AWAY FROM THE SLOPE FACES AT THE END OF EACH WORKING DAY WHEN A CHANCE OF RAIN IS FORECAST.
8. ALL RILLS, GULLIES, ETC. WILL BE PROMPTLY REPAIRED AS PRACTICAL BY REGRADING OR INSTALLATION OF SOIL, GRAVEL OR SANDBACS. REPAIRED RILLS SHOULD BE PROTECTED WITH EROSION CONTROL MATTING, BONDED FIBER MATRIX OR POLYACRYLAMIDE AND MULCH, OR EQUIVALENT (SEE APPLICATION TABLES).
9. DISCHARGERS SHALL LIMIT THE USE OF PLASTIC MATERIALS WHEN MORE SUSTAINABLE, ENVIRONMENTALLY FRIENDLY ALTERNATIVES EXIST. WHERE PLASTIC MATERIALS ARE DEEMED NECESSARY, THE DISCHARGER SHALL CONSIDER THE USE OF PLASTIC MATERIALS RESISTANT TO SOLAR DEGRADATION.

E. SEDIMENT CONTROLS

1. DISCHARGERS SHALL ESTABLISH AND MAINTAIN EFFECTIVE BMP PERIMETER CONTROLS AND STABILIZE ALL CONSTRUCTION ENTRANCES AND EXITS TO SUFFICIENTLY CONTROL EROSION AND SEDIMENT DISCHARGES FROM THE SITE YEAR-ROUND.
2. STABILIZED CONSTRUCTION ENTRANCES SHALL BE INSTALLED PRIOR TO COMMENCEMENT OF SITE WORK. ALL CONSTRUCTION TRAFFIC ENTERING THE PAVED ROAD MUST CROSS THIS ENTRANCE. THE CONSTRUCTION ENTRANCE WILL CONSIST OF AN 8-INCH LAYER OF 3- TO 6-INCH COARSE AGGREGATE GRAVEL EXTENDING A MINIMUM DISTANCE OF 50 FEET AT EACH VEHICLE ACCESS POINT FROM EXISTING PAVED STREETS. SPRINKLING FOR DUST CONTROL SHOULD NOT BE UNDERTAKEN FOR AN ADDITIONAL 50 FEET FROM THE GRAVEL ENTRANCE. THE ENTRANCE SHALL BE MAINTAINED IN A CONDITION THAT WILL PREVENT TRACKING OR FLOWING OF SEDIMENT ONTO PUBLIC RIGHTS-OF-WAY.
3. PAVED STREETS WILL BE MONITORED DAILY AND FREQUENTLY CLEANED. SOIL TRACKED ONTO THE STREET, OR EARTH MATERIAL AND DEBRIS STOCKPILED IN THE STREET, WILL BE PICKED UP BY A LOADER BUCKET AND/OR HAND SHOVELED WHEN OBSERVED. STREETS WILL ALSO BE SWEPT ON AT LEAST A WEEKLY BASIS OR MORE OFTEN, AS NEEDED, TO MAINTAIN CONTINUOUS LITTER AND TRACKING CONTROL. STREET WASHING WILL NOT BE DONE.
4. ALL DRAIN INLETS WILL BE PROTECTED AS THEY ARE COMPLETED, DURING THE ENTIRE COURSE OF CONSTRUCTION.
5. IF SEDIMENT BASINS ARE TO BE USED, DISCHARGERS SHALL, AT MINIMUM, DESIGN SEDIMENT BASINS ACCORDING TO THE METHOD PROVIDED IN CASQA'S CONSTRUCTION BMP GUIDANCE HANDBOOK.
6. AFTER EACH RAINSTORM, SILT AND DEBRIS SHALL BE REMOVED FROM CHECK DAMS, STRAW ROLLS/WATTLES, SILT FENCES, AND SILT SACKS. SEDIMENT TRAPS/BASINS SHOULD ALSO BE OBSERVED AND PUMPED DRY AS NECESSARY TO ASSURE PROPER FUNCTION, AND CAPACITY. ANY REMOVED SEDIMENT SHOULD BE PLACED AWAY FROM CONCENTRATED FLOW (DRAINS, DITCHES, CRACKS) AT A SUITABLE ONSITE LOCATION OR REMOVED TO AN APPROPRIATE DISPOSAL SITE.
7. INTERIOR STRAW ROLLS/WATTLES MAY BE REMOVED AS THE AREA COMES UNDER CONSTRUCTION FOR FINISH GRADING AND LANDSCAPING INSTALLATION. PERIMETER PROTECTION SHOULD BE LEFT IN PLACE YEAR-ROUND.
8. GRAVEL CHECK DAMS MAY BE REMOVED FROM UNPAVED ROADWAYS AS THEY COME UNDER CONSTRUCTION.

F. RUN-ON AND RUNOFF CONTROLS

1. DISCHARGERS SHALL EFFECTIVELY MANAGE ALL RUN-ON, ALL RUNOFF WITHIN THE SITE, AND ALL RUNOFF THAT DISCHARGES OFF THE SITE. RUN-ON FROM OFFSITE SHALL BE DIRECTED AWAY FROM ALL DISTURBED AREAS OR SHALL COLLECTIVELY BE IN COMPLIANCE WITH THE EFFLUENT LIMITATIONS IN THIS GENERAL PERMIT.

G. INSPECTION, MAINTENANCE AND REPAIR

1. INSPECTION, MAINTENANCE, REPAIR AND SAMPLING ACTIVITIES AT THE PROJECT LOCATION SHALL BE PERFORMED OR SUPERVISED BY A QUALIFIED SWPPP PRACTITIONER (QSP) REPRESENTING THE DISCHARGER. THE QSP MAY DELEGATE ANY OR ALL OF THESE ACTIVITIES TO AN EMPLOYEE TRAINED TO DO THE TASK(S) APPROPRIATELY, BUT SHALL ENSURE ADEQUATE DEPLOYMENT.
2. INSPECTIONS AND OBSERVATIONS SHALL OCCUR WEEKLY, AND AT LEAST ONCE EACH 24-HOUR PERIOD DURING EXTENDED STORM EVENTS, TO IDENTIFY AND RECORD BMPS THAT NEED MAINTENANCE TO OPERATE EFFECTIVELY, THAT HAVE FAILED, OR THAT COULD FAIL TO OPERATE AS INTENDED.
3. UPON IDENTIFYING FAILURES OR OTHER SHORTCOMINGS, AS DIRECTED BY THE QSP, REPAIRS OR DESIGN CHANGES TO BMPS SHOULD BE IMPLEMENTED WITHIN 72 HOURS OF IDENTIFICATION AND COMPLETE THE CHANGES AS SOON AS POSSIBLE.
4. FOR EACH INSPECTION REQUIRED, AN INSPECTION CHECKLIST SHALL BE COMPLETED, USING A FORM PROVIDED BY THE STATE WATER BOARD OR REGIONAL WATER BOARD OR IN AN ALTERNATIVE FORMAT. THE CHECKLIST SHOULD BE INSERTED INTO THE FIELD SWPPP BINDER AND KEPT FOR A PERIOD OF 3 YEARS.

H. RAIN EVENT ACTION PLAN

NOT REQUIRED FOR RISK LEVEL 1 DISCHARGERS.

I. RISK LEVEL 1 MONITORING AND REPORTING REQUIREMENTS

SUMMARY OF MONITORING REQUIREMENTS							
RISK LEVEL	VISUAL INSPECTIONS					SAMPLE COLLECTION	
	QUARTERLY NON-STORMWATER DISCHARGE	PRE-STORM EVENT		DAILY STORM BMP	POST STORM	STORMWATER DISCHARGE	RECEIVING WATER
		BASELINE	REAP				
1	X	X		X	X		

VISUAL MONITORING REQUIREMENTS FOR QUALIFYING RAIN EVENTS
1. RISK LEVEL 1 DISCHARGERS SHALL VISUALLY OBSERVE (INSPECT) STORM WATER DISCHARGES AT ALL DISCHARGE LOCATIONS WITHIN TWO BUSINESS DAYS (48 HOURS) AFTER EACH QUALIFYING RAIN EVENT.
2. RISK LEVEL 1 DISCHARGERS SHALL VISUALLY OBSERVE (INSPECT) THE DISCHARGE OF STORED OR CONTAINED STORM WATER THAT IS DERIVED FROM AND DISCHARGED SUBSEQUENT TO A QUALIFYING RAIN EVENT PRODUCING PRECIPITATION OF 1/2 INCH OR MORE AT THE TIME OF DISCHARGE. STORED OR CONTAINED STORM WATER THAT WILL LIKELY DISCHARGE AFTER OPERATING HOURS DUE TO ANTICIPATED PRECIPITATION SHALL BE OBSERVED PRIOR TO THE DISCHARGE DURING OPERATING HOURS.
3. RISK LEVEL 1 DISCHARGERS SHALL CONDUCT VISUAL OBSERVATIONS (INSPECTIONS) DURING BUSINESS HOURS ONLY.
4. WITHIN 2 BUSINESS DAYS (48 HOURS) PRIOR TO EACH QUALIFYING RAIN EVENT, RISK LEVEL 1 DISCHARGERS SHALL VISUALLY OBSERVE (INSPECT):
   i. ALL STORM WATER DRAINAGE AREAS TO IDENTIFY ANY SPILLS, LEAKS, OR UNCONTROLLED POLLUTANT SOURCES. IF NEEDED, THE DISCHARGER SHALL IMPLEMENT APPROPRIATE CORRECTIVE ACTIONS.
   ii. ALL BMPS TO IDENTIFY WHETHER THEY HAVE BEEN PROPERLY IMPLEMENTED IN ACCORDANCE WITH THE SWPPP. IF NEEDED, THE DISCHARGER SHALL IMPLEMENT APPROPRIATE CORRECTIVE ACTIONS.
   iii. ANY STORM WATER STORAGE AND CONTAINMENT AREAS TO DETECT LEAKS AND ENSURE MAINTENANCE OF ADEQUATE FREEBOARD.
5. FOR THE VISUAL OBSERVATIONS (INSPECTIONS) DESCRIBED IN 4.I AND 4.III ABOVE, RISK LEVEL 1 DISCHARGERS SHALL OBSERVE THE PRESENCE OR ABSENCE OF FLOATING AND SUSPENDED MATERIALS, A SHEEN ON THE SURFACE, DISCOLORATIONS, TURBIDITY, ODORS, AND SOURCE(S) OF ANY OBSERVED POLLUTANTS.
6. WITHIN TWO BUSINESS DAYS (48 HOURS) AFTER EACH QUALIFYING RAIN EVENT, RISK LEVEL 1 DISCHARGERS SHALL CONDUCT POST RAIN EVENT VISUAL OBSERVATIONS (INSPECTIONS) TO (1) IDENTIFY WHETHER BMPS WERE ADEQUATELY DESIGNED, IMPLEMENTED, AND EFFECTIVE, AND (2) IDENTIFY ADDITIONAL BMPS AND REVISE THE SWPPP ACCORDINGLY.
7. RISK LEVEL 1 DISCHARGERS SHALL MAINTAIN ON-SITE RECORDS OF ALL VISUAL OBSERVATIONS (INSPECTIONS), PERSONNEL PERFORMING THE OBSERVATIONS, OBSERVATION DATES, WEATHER CONDITIONS, LOCATIONS OBSERVED, AND CORRECTIVE ACTIONS TAKEN IN RESPONSE TO THE OBSERVATIONS.

VISUAL OBSERVATION EXEMPTIONS
1. RISK LEVEL 1 DISCHARGERS ARE NOT REQUIRED TO CONDUCT VISUAL OBSERVATION (INSPECTIONS) UNDER THE FOLLOWING CONDITIONS:
   - DURING DANGEROUS WEATHER CONDITIONS SUCH AS FLOODING AND ELECTRICAL STORMS.
   - OUTSIDE OF SCHEDULED SITE BUSINESS HOURS.
2. IF NO REQUIRED VISUAL OBSERVATIONS (INSPECTIONS) ARE COLLECTED DUE TO THESE EXCEPTIONS, RISK LEVEL 1 DISCHARGERS SHALL INCLUDE AN EXPLANATION IN THEIR SWPPP AND IN THE ANNUAL REPORT DOCUMENTING WHY THE VISUAL OBSERVATIONS (INSPECTIONS) WERE NOT CONDUCTED.

NON-STORMWATER DISCHARGE MONITORING REQUIREMENTS
1. VISUAL MONITORING REQUIREMENTS:
   i. RISK LEVEL 1 DISCHARGERS SHALL VISUALLY OBSERVE (INSPECT) EACH DRAINAGE AREA FOR THE PRESENCE OF (OR INDICATIONS OF PRIOR) UNAUTHORIZED AND AUTHORIZED NON-STORM WATER DISCHARGES AND THEIR SOURCES.
   ii. RISK LEVEL 1 DISCHARGERS SHALL CONDUCT ONE VISUAL OBSERVATION (INSPECTION) QUARTERLY IN EACH OF THE FOLLOWING PERIODS: JANUARY- MARCH, APRIL-JUNE, JULY-SEPTEMBER, AND OCTOBER-DECEMBER. VISUAL OBSERVATION (INSPECTIONS) ARE ONLY REQUIRED DURING DAYLIGHT HOURS (SUNRISE TO SUNSET).
   iii. RISK LEVEL 1 DISCHARGERS SHALL ENSURE THAT VISUAL OBSERVATIONS (INSPECTIONS) DOCUMENT THE PRESENCE OR EVIDENCE OF ANY NON- STORM WATER DISCHARGE (AUTHORIZED OR UNAUTHORIZED), POLLUTANT CHARACTERISTICS (FLOATING AND SUSPENDED MATERIAL, SHEEN, DISCOLORATION, TURBIDITY, ODOR, ETC.), AND SOURCE. RISK LEVEL 1 DISCHARGERS SHALL MAINTAIN ON-SITE RECORDS INDICATING THE PERSONNEL PERFORMING THE VISUAL OBSERVATION (INSPECTIONS), THE DATES AND APPROXIMATE TIME EACH DRAINAGE AREA AND NON-STORM WATER DISCHARGE WAS OBSERVED, AND THE RESPONSE TAKEN TO ELIMINATE UNAUTHORIZED NON-STORM WATER DISCHARGES AND TO REDUCE OR PREVENT POLLUTANTS FROM CONTACTING NON-STORM WATER DISCHARGES.

NON-VISIBLE POLLUTANT MONITORING REQUIREMENTS
1. RISK LEVEL 1 DISCHARGERS SHALL COLLECT ONE OR MORE SAMPLES DURING ANY BREACH, MALFUNCTION, LEAKAGE, OR SPILL OBSERVED DURING A VISUAL INSPECTION WHICH COULD RESULT IN THE DISCHARGE OF POLLUTANTS TO SURFACE WATERS THAT WOULD NOT BE VISUALLY DETECTABLE IN STORM WATER.
2. RISK LEVEL 1 DISCHARGERS SHALL ENSURE THAT WATER SAMPLES ARE LARGE ENOUGH TO CHARACTERIZE THE SITE CONDITIONS.
3. RISK LEVEL 1 DISCHARGERS SHALL COLLECT SAMPLES AT ALL DISCHARGE LOCATIONS THAT CAN BE SAFELY ACCESSED DURING THE FIRST TWO HOURS OF DISCHARGE FROM RAIN EVENTS THAT OCCUR DURING BUSINESS HOURS AND WHICH GENERATE RUNOFF.
4. RISK LEVEL 1 DISCHARGERS SHALL ANALYZE SAMPLES FOR ALL NON-VISIBLE POLLUTANT PARAMETERS (IF APPLICABLE) – PARAMETERS INDICATING THE PRESENCE OF POLLUTANTS IDENTIFIED IN THE POLLUTANT SOURCE ASSESSMENT REQUIRED (RISK LEVEL 1 DISCHARGERS SHALL MODIFY THEIR CSMPS TO ADDRESS THESE ADDITIONAL PARAMETERS IN ACCORDANCE WITH ANY UPDATED SWPPP POLLUTANT SOURCE ASSESSMENT).
5. RISK LEVEL 1 DISCHARGERS SHALL COLLECT A SAMPLE OF STORM WATER THAT HAS NOT COME IN CONTACT WITH THE DISTURBED SOIL OR THE MATERIALS STORED OR USED ON-SITE (UNCONTAMINATED SAMPLE) FOR COMPARISON WITH THE DISCHARGE SAMPLE.
6. RISK LEVEL 1 DISCHARGERS SHALL KEEP ALL FIELD /OR ANALYTICAL DATA IN THE SWPPP DOCUMENT.

SHEET INDEX

SHEET NUMBER	TITLE
B-1	NOTES
B-2	COMMERCIAL KITCHEN – BMP
B-3	COMMERCIAL KITCHEN – FIELD MARKUP
B-4	ARTIST BUILDING – BMP
B-5	ARTIST BUILDING – FIELD MARKUP
B-6	DETAILS

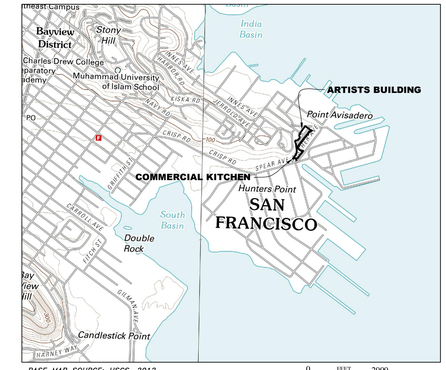

BASE MAP SOURCE: USGS, 2012

VICINITY MAP

TYPICAL BMPs ON SHEET B-6

1) SURFACE ROUGHENING
2) GRAVEL BAG CHECK DAM FOR ROUGH GRADED ROADWAYS
3) INLET PROTECTION AFTER PAVING
4) INLET PROTECTION IN NON-ACTVE CONSTRUCTION AREAS
5) DITCH CHECK DAM
6) TEMPORARY GRAVEL CONSTRUCTION ENTRANCE/EXIT
7) TEMPORARY COVER ON STOCKPILE
8) CHEMICAL TOILET
9) SILT FENCE
10) CONCRETE WASTE MANAGEMENT
11) STRAW WATTLE
12) CUT BACK CURB
13) EARTH DIKE

TABLE I

HYDROMULCH AND TACKIFIER SPECIFICATIONS

APPLICATION A
THREE STEP APPLICATION METHOD
STEP 1
500 LBS. PER ACRE WOOD FIBER MULCH
1000 LBS. PER ACRE COMPOST
300 LBS. PER ACRE FERTILIZER (16-6-8)
STEP 2
2 TONS PER ACRE STRAW
STEP 3
500 LBS. PER ACRE WOOD FIBER MULCH
200 LBS. PER ACRE ORGANIC TACKIFIER

APPLICATION B
ONE STEP APPLICATION METHOD
2000 LBS. PER ACRE WOOD FIBER MULCH OR APPROVED EQUIVALENT.
300 LBS. PER ACRE FERTILIZER (16-6-8)
1000 LBS. PER ACRE COMPOST

SEED AS SPECIFIED (SEE TABLE III)
200 LBS. PER ACRE ORGANIC TACKIFIER (SUCH AS M-BINDER BRAND)

APPLICATION C
STRAW AND TACKIFIER:
STRAW 2 TONS/ACRE
TACKIFIER 200 LBS/ACRE

TABLE II

POLYACRYLAMIDE SPECIFICATIONS

MATRIX-PRECIPITAION RATE: 19" OR LESS IN A 4-5 MONTH PERIOD.
SEE SEASON II #8 AND SEASON IB #6 NOTES

SLOPE	6:1	5:1	4:1	3:1	2:1	1.5:1	1:1
EARTHGUARD* (GALS/ACRE)	4	5	6	7	8	9	10
MULCH (LB./ARCRE)	800-1,000	1,000-1,200	1,200-1,500	1,500-1,800	1,800-2,500	2,000-2,500	2,500-3,000

*NOTE PRODUCED BY TERRA NOVO: 888-843-1029 OR APPROVED EQUIVALENT

TABLE III

EROSION CONTROL FABRIC (ECF) SPECIFICATIONS

CURLEX NETFREE, NORTH AMERICAN GREEN S150, WESTERN EXCELSIOR CS-3 OR APPROVED EQUIVALENT

TABLE IV

BONDED FIBER MATRIX SPECIFICATIONS

ECO AEGIS	2500 LB./ACRE
FLEX TERRA*	2500 LB./ACRE

2010 CROW CANYON PLACE
SUITE 250
SAN RAMON, CALIFORNIA 94583
(925) 866-9000
FAX (888) 279-2698
ENGEO
Expect Excellence
SAN RAMON - SAN JOSE - SAN FRANCISCO - OAKLAND - RICHLIN - RIPON
SANTA CLARITA - IRVINE - NEW ZEALAND

NOTES
EROSION AND SEDIMENT CONTROL PLAN
ARTISTS PARCELS
SAN FRANCISCO, CALIFORNIA

DESIGNED BY: AM
DRAWN BY: SRP
CHECKED BY: JB
DATE: NOVEMBER 2015
SCALE: AS SHOWN

REV.	DATE	DESCRIPTION	BY

SHEET NUMBER
B-1
OF 6 SHEETS
PROJECT NO.
9993.001.000

COPYRIGHT © 2015 BY ENGEO INCORPORATED. THIS DOCUMENT MAY NOT BE REPRODUCED IN WHOLE OR IN PART BY ANY MEANS WHATSOEVER, NOR MAY IT BE QUOTED OR EXCERPTED WITHOUT THE EXPRESS WRITTEN CONSENT OF ENGEO INCORPORATED.

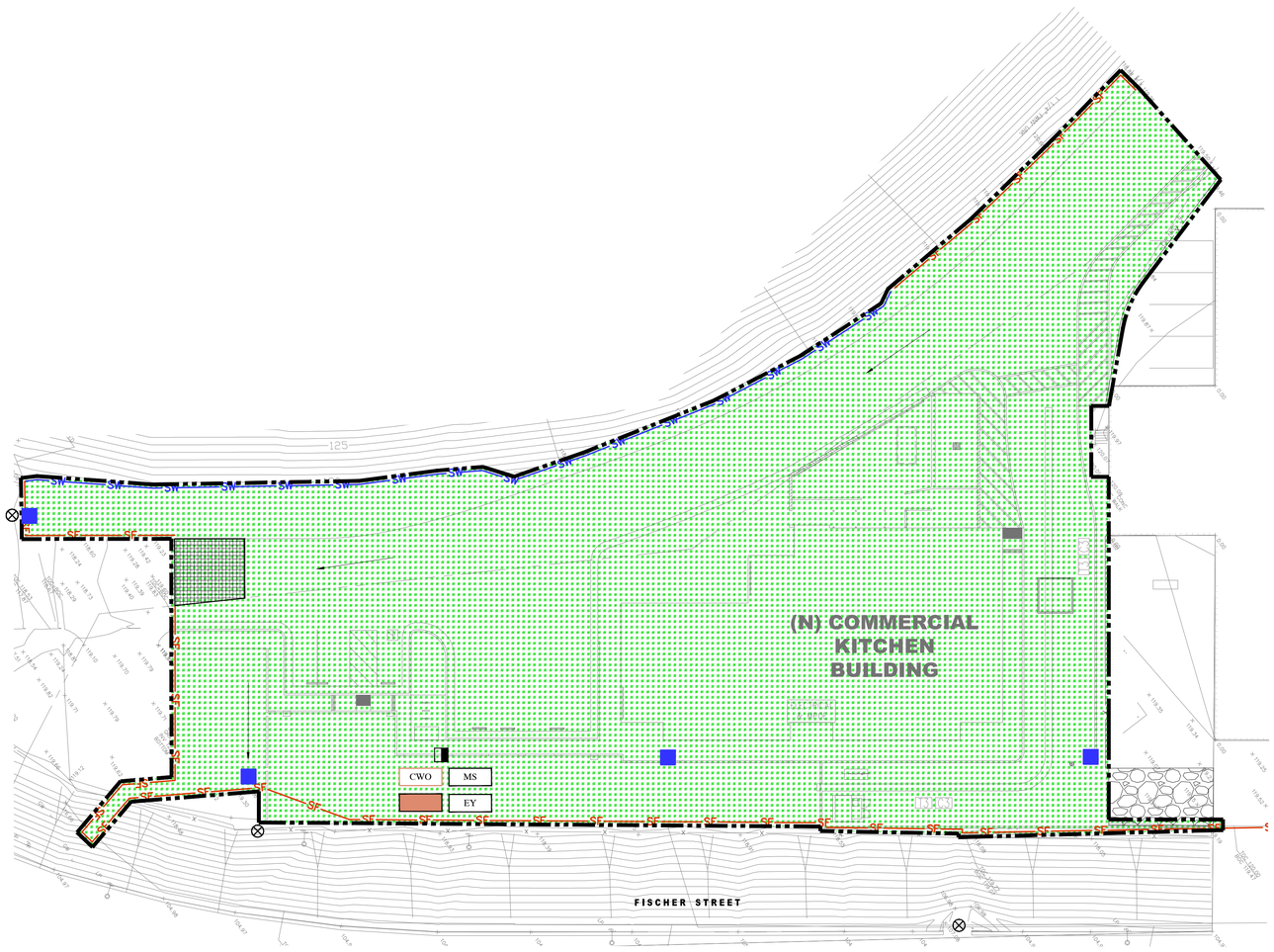

N

20 10 0 20

SCALE IN FEET

EXPLANATION

ALL LOCATIONS ARE APPROXIMATE

- CONSTRUCTION SITE BOUNDARY (AREA OF SWPPP CONTROL)
- SW — STRAW WATTLE / FIBER ROLL
- SF — SILT FENCE
- DIRECTION OF FLOW
- STABILIZED ENTRANCE / EXIT
- AREA NOT TO BE DISTURBED (VEGETATED HILLSIDE)
- HYDROMULCH
- INLET PROTECTION
- CHEMICAL TOILET
- CWO — CONCRETE WASH OUT
- MS — MATERIAL STORAGE AREA
- EY — EQUIPMENT STORAGE, FUELING AND SERVICE "YARD"
- TRASH BIN/ DUMPSTER
- DISCHARGE LOCATION

ENGEO
Expect Excellence
2010 CROW CANYON PLACE
SUITE 250
SAN RAMON, CALIFORNIA 94583
(925) 866-9000
FAX (888) 279-2698
SAN RAMON - SAN JOSE - SAN FRANCISCO - OAKLAND - ROCKLIN - RIPON
SANTA CLARITA - IRVINE - NEW ZEALAND

COMMERCIAL KITCHEN - FIELD MARKUP

EROSION AND SEDIMENT CONTROL PLAN

ARTISTS PARCELS

SAN FRANCISCO, CALIFORNIA

DESIGNED BY: AM
DRAWN BY: LL
CHECKED BY: JB
DATE: NOVEMBER 2015
SCALE: AS SHOWN

REV.	DATE	DESCRIPTION	BY
-			

SHEET NUMBER
B-2
OF 6 SHEETS

PROJECT NO.
9993.001.000

COPYRIGHT © 2015 BY ENGEO INCORPORATED. THIS DOCUMENT MAY NOT BE REPRODUCED IN WHOLE OR IN PART BY ANY MEANS WHATSOEVER, NOR MAY IT BE QUOTED OR EXCERPTED WITHOUT THE EXPRESS WRITTEN CONSENT OF ENGEO INCORPORATED.

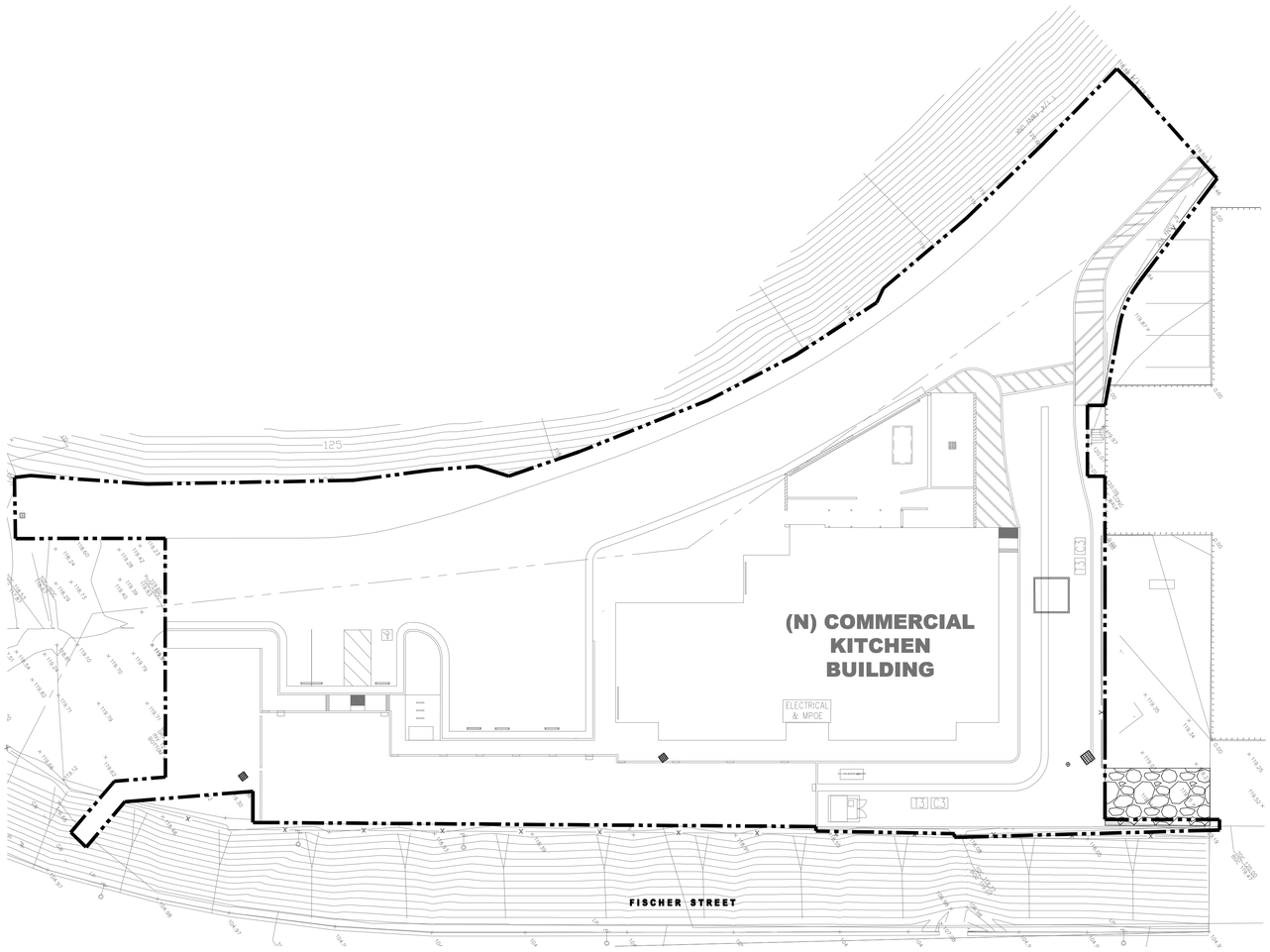

EXPLANATION

ALL LOCATIONS ARE APPROXIMATE

CONSTRUCTION SITE BOUNDARY (AREA OF SWPPP CONTROL)

ENGEO
Expect Excellence
2010 CROW CANYON PLACE
SUITE 250
SAN RAMON, CALIFORNIA 94583
(925) 866-0000
FAX (888) 279-2698
SAN RAMON - SAN JOSE - SAN FRANCISCO - OAKLAND - ROCKLIN - RIPON
SANTA CLARITA - IRVINE - NEW ZEALAND

COMMERCIAL KITCHEN - FIELD MARKUP

EROSION AND SEDIMENT CONTROL PLAN
ARTISTS PARCELS
SAN FRANCISCO, CALIFORNIA

DESIGNED BY: AM
DRAWN BY: LL
CHECKED BY: JB
DATE: NOVEMBER 2015
SCALE: AS SHOWN

REV.	DATE	DESCRIPTION	BY
-			

SHEET NUMBER
B-3
OF 6 SHEETS

PROJECT NO.
9993.001.000

COPYRIGHT © 2015 BY ENGEO INCORPORATED. THIS DOCUMENT MAY NOT BE REPRODUCED IN WHOLE OR IN PART BY ANY MEANS WHATSOEVER, NOR MAY IT BE QUOTED OR EXCERPTED WITHOUT THE EXPRESS WRITTEN CONSENT OF ENGEO INCORPORATED.

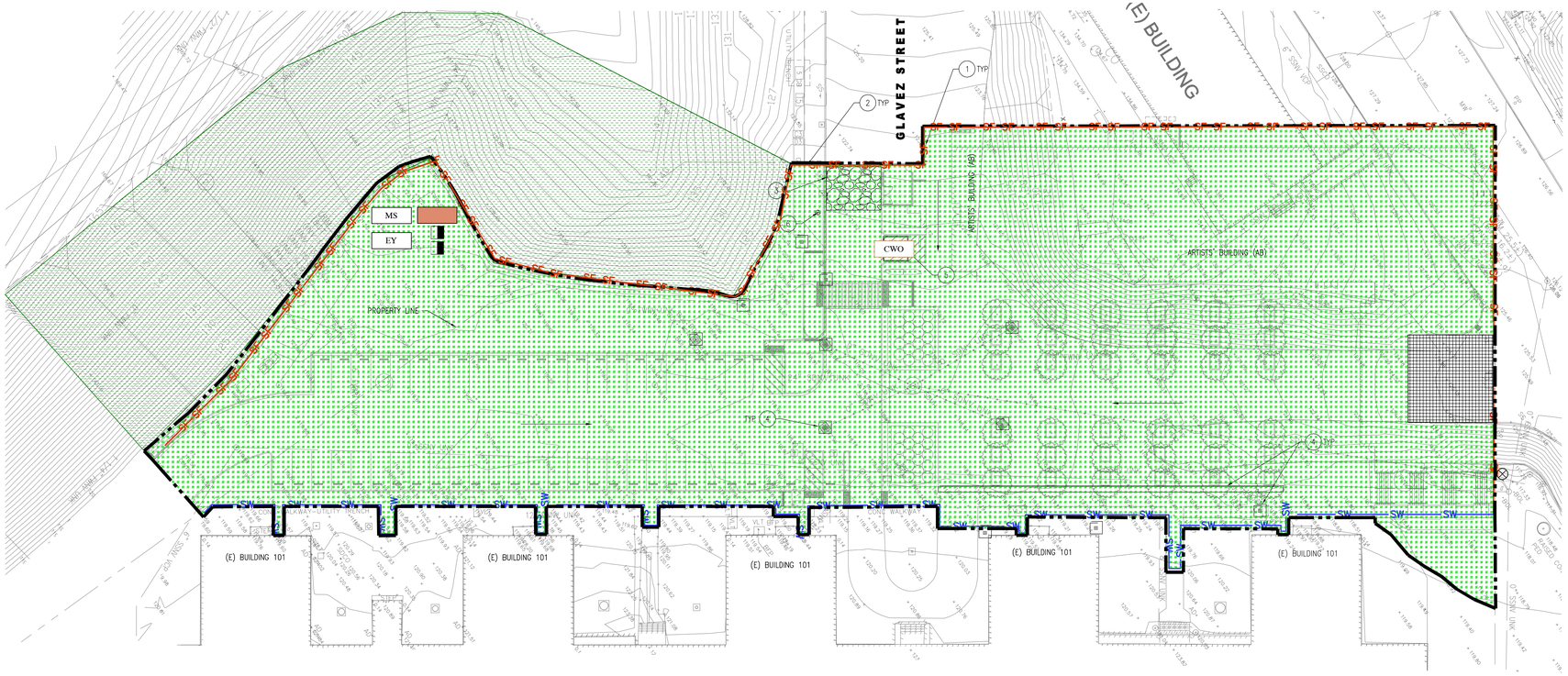

N

30 15 0 30

SCALE IN FEET

EXPLANATION

ALL LOCATIONS ARE APPROXIMATE

- CONSTRUCTION SITE BOUNDARY (AREA OF SWPPP CONTROL)
- SW — STRAW WATTLE / FIBER ROLL
- SF — SILT FENCE
- DIRECTION OF FLOW
- STABILIZED ENTRANCE / EXIT
- AREA NOT TO BE DISTURBED (VEGETATED HILLSIDE)
- HYDROMULCH
- INLET PROTECTION
- CHEMICAL TOILET
- CWO — CONCRETE WASH OUT
- MS — MATERIAL STORAGE AREA
- EY — EQUIPMENT STORAGE, FUELING AND SERVICE "YARD"
- TRASH BIN/ DUMPSTER
- DISCHARGE LOCATION

2010 CROW CANYON PLACE
SUITE 250
SAN RAMON, CALIFORNIA 94583
(925) 866-9000
FAX (888) 279-2698

ENGEO
Expect Excellence
SAN RAMON · SAN JOSE · SAN FRANCISCO · OAKLAND · ROCKLIN · RIPON
SANTA CLARITA · IRVINE · NEW ZEALAND

ARTISTS BUILDING - BMP

EROSION AND SEDIMENT CONTROL PLAN

ARTISTS PARCELS

SAN FRANCISCO, CALIFORNIA

DESIGNED BY:	AM
DRAWN BY:	DLB
CHECKED BY:	JB
DATE:	NOVEMBER 2015
SCALE:	AS SHOWN

REV.	DATE	DESCRIPTION	BY
*			

SHEET NUMBER

B-4

OF 6 SHEETS

PROJECT NO.

9993.001.000

COPYRIGHT © 2015 BY ENGEO INCORPORATED. THIS DOCUMENT MAY NOT BE REPRODUCED IN WHOLE OR IN PART BY ANY MEANS WHATSOEVER, NOR MAY IT BE QUOTED OR EXCERPTED WITHOUT THE EXPRESS WRITTEN CONSENT OF ENGEO INCORPORATED.

G:\Drafting\DRAFTING_Dwg\9993\001\001\9993.001.000-ESDP-ArtistsBuilding-e-Plan-1115.dwg 11-23-15 02:38:25 PM dee

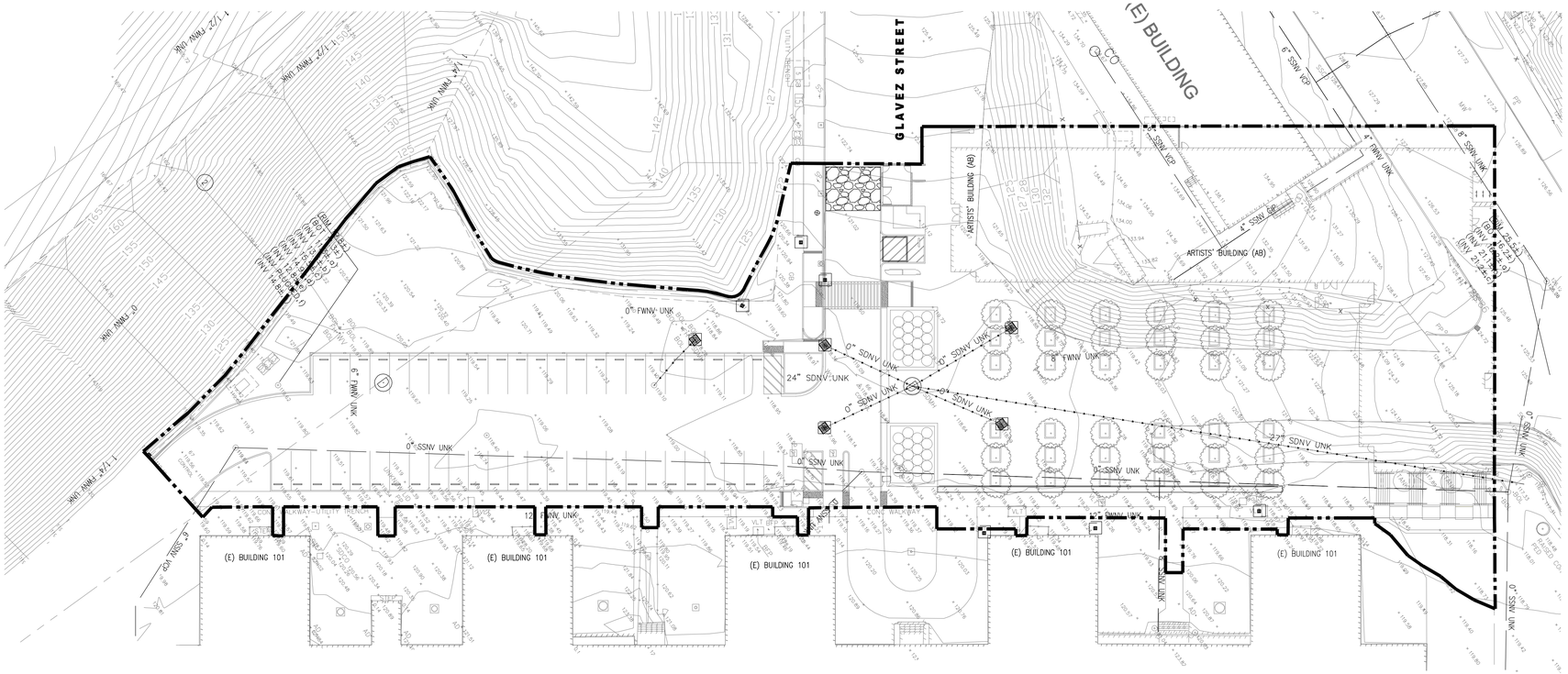

N

30 15 0 30

SCALE IN FEET

EXPLANATION

ALL LOCATIONS ARE APPROXIMATE

CONSTRUCTION SITE BOUNDARY (AREA OF SWPPP CONTROL)

ENGEO
Expect Excellence
2010 CROW CANYON PLACE
SUITE 250
SAN RAMON, CALIFORNIA 94583
(925) 866-9000
FAX (888) 279-2698
SAN RAMON · SAN JOSE · SAN FRANCISCO · OAKLAND · ROCKLIN · RIPON
SANTA CLARITA · IRVINE · NEW ZEALAND

ARTISTS BUILDING - NO BMP

EROSION AND SEDIMENT CONTROL PLAN

ARTISTS PARCELS

SAN FRANCISCO, CALIFORNIA

DESIGNED BY: AM
DRAWN BY: DLB
CHECKED BY: JB
DATE: NOVEMBER 2015
SCALE: AS SHOWN

REV.	DATE	DESCRIPTION	BY

SHEET NUMBER
B-5
OF 6 SHEETS

PROJECT NO.
9993.001.000

COPYRIGHT © 2015 BY ENGEO INCORPORATED. THIS DOCUMENT MAY NOT BE REPRODUCED IN WHOLE OR IN PART BY ANY MEANS WHATSOEVER, NOR MAY IT BE QUOTED OR EXCERPTED WITHOUT THE EXPRESS WRITTEN CONSENT OF ENGEO INCORPORATED.

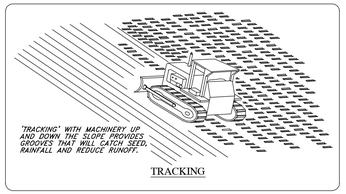

1 SURFACE ROUGHENING
NO SCALE

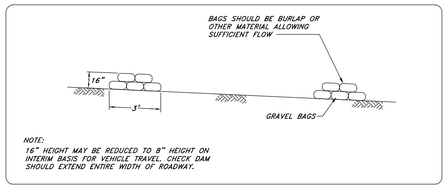

2 GRAVEL BAG CHECK DAM FOR ROUGH GRADED ROADWAYS
NO SCALE

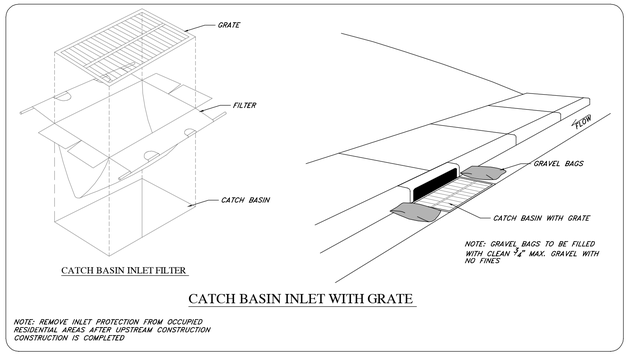

CATCH BASIN INLET WITH GRATE

3 INLET PROTECTION AFTER PAVING
NO SCALE

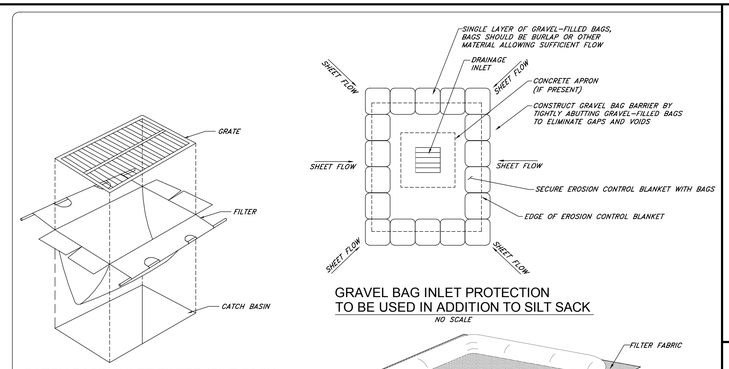

4 INLET PROTECTION IN NON-ACTIVE CONSTRUCTION AREAS
NO SCALE

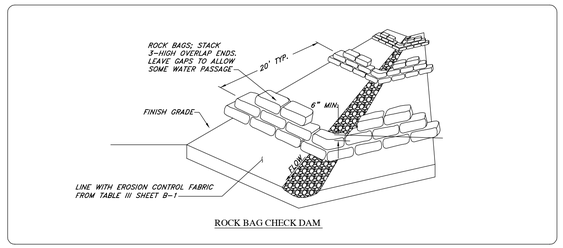

5 DITCH CHECK DAM
NO SCALE

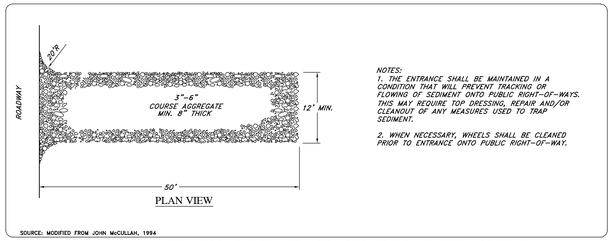

6 TEMPORARY GRAVEL CONSTRUCTION ENTRANCE/EXIT
NO SCALE

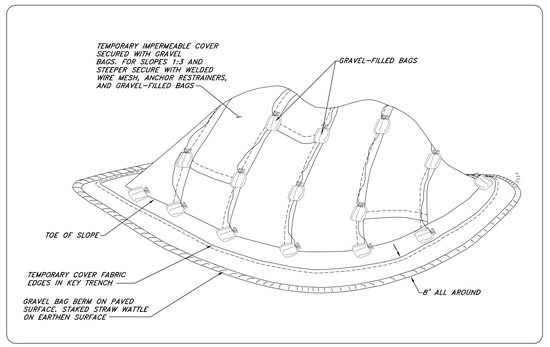

7 TEMPORARY COVER ON STOCKPILE
NO SCALE

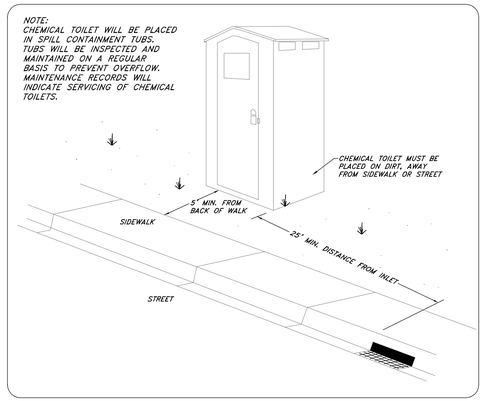

8 CHEMICAL TOILET
NO SCALE

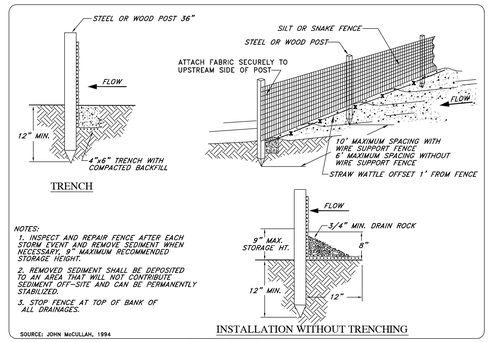

9 SILT FENCE
NO SCALE

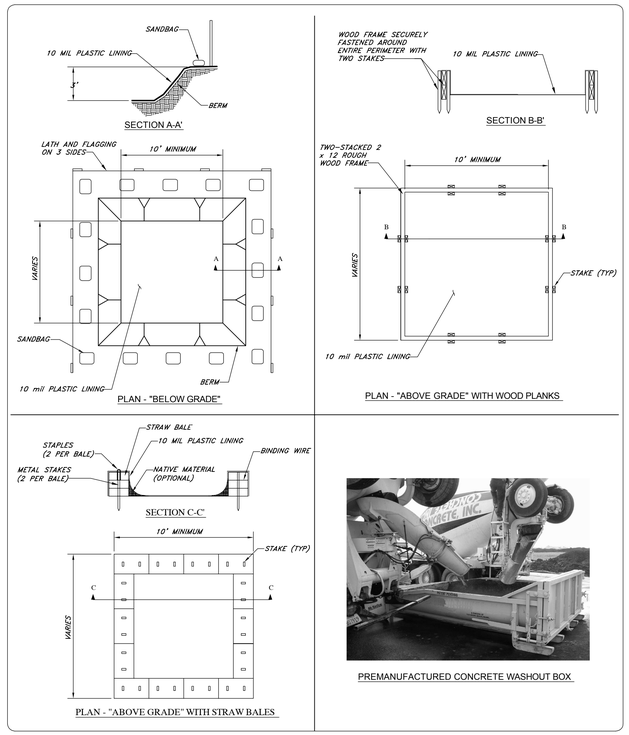

PREMANUFACTURED CONCRETE WASHOUT BOX

10 CONCRETE WASTE MANAGEMENT
NO SCALE

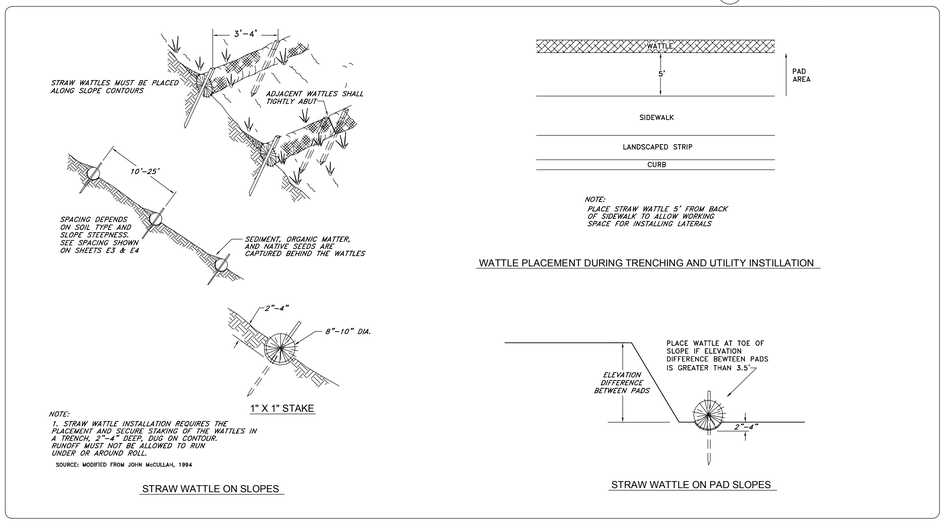

11 STRAW WATTLE
NO SCALE

APPROXIMATE CUTBACK CURB DIMENSIONS FOR TYPICAL BUILDING PAD

PAD DRAINAGE AREA	PAD SURFACE AREA	SEDIMENT TRAP VOLUME	SEDIMENT TRAP VOLUME REQUIRED
(Sq. Ft)	(Acres)	(Cubic Ft.)	(Cubic Yds.)
10,000	0.23	413	15.3
8,000	0.18	330	12.3
6,000	0.14	248	9.2

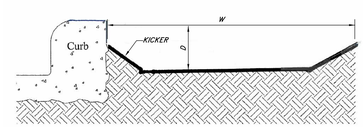

12 CUT BACK CURB
NO SCALE

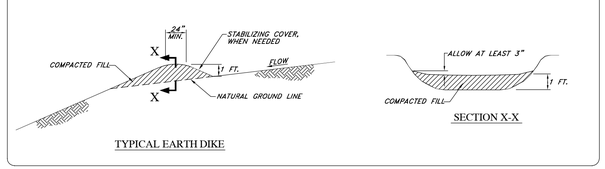

13 EARTH DIKE
NO SCALE

ENGEO
Expect Excellence
SAN FRANCISCO, CALIFORNIA 94104
332 PINE STREET
SUITE 300
(415) 284-9900
FAX (888) 279-2698
SAN RAMON - SAN JOSE - SAN FRANCISCO - CONCORD - ROCKLIN - RIPON
SANTA CLARITA - IRVINE - NORTH HILLS

DETAILS
EROSION AND SEDIMENT CONTROL PLAN
ARTISTS PARCELS
SAN FRANCISCO, CALIFORNIA

DESIGNED BY:	AM
DRAWN BY:	SRP
CHECKED BY:	JB
DATE:	NOVEMBER 2015
SCALE:	AS SHOWN

REV.	DATE	DESCRIPTION	BY

SHEET NUMBER
B-6
OF 3 SHEETS
PROJECT NO.
9993.001.000

COPYRIGHT © 2015 BY ENGEO INCORPORATED. THIS DOCUMENT MAY NOT BE REPRODUCED IN WHOLE OR IN PART BY ANY MEANS WHATSOEVER, NOR MAY IT BE QUOTED OR EXCERPTED WITHOUT THE EXPRESS WRITTEN CONSENT OF ENGEO INCORPORATED.

G:\Projects\9993001000\CAD\Plots\9993001000-SDP-DETAILS-B-1113.dwg Plot Date: Nov 12, 2015 - 10:26 Plot By: Rhea